

Rove Concepts

# Tano Outdoor Curved Modular Sofa

**Soft curves and sumptuous materials merge in the Tano Outdoor Curved Modular Sofa to create an aura of sophisticated warmth in any outdoor living space. Accentuated by the plush cushioning and robust silhouette, the Tano creates the ultimate space for relaxation. Enjoy our preset configurations or customize your own design by purchasing pieces separately.**

**Explore our entire Tano Outdoor Collection here.**

## Details

- High performance aluminum frame
- Rust proof
- Choose from black or white fade resistant powder coated finish
- Fast dry foam
- UV resistant fabric seat
- Firm Feel (Learn more about our sofa firmness here.)
- Includes one right corner piece and one left corner piece
- Light assembly required
- We recommend our custom-fit outdoor covers (sold separately) to protect and ensure lasting durability for years of use. Find your product here.
- To join the modular pieces together please use the connector pieces that are included

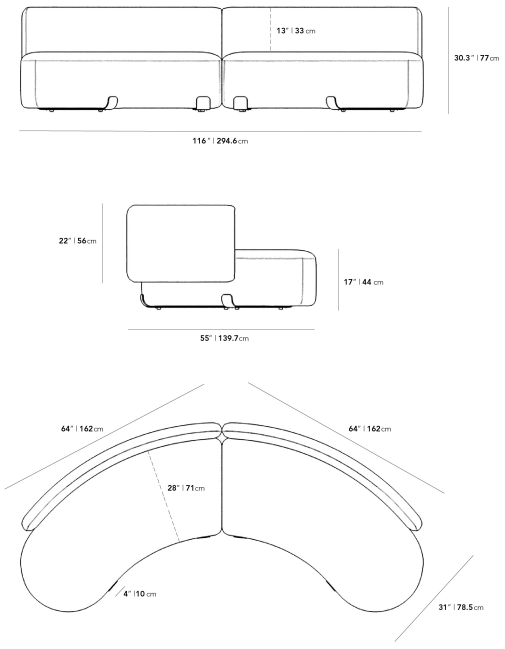


## Dimensions

116 in x 55 in x 30.3 in (Width x Depth x Height)
All measurements are approximations.